# SCHOOL SPORTS RECORDS

# PROGRAM

*A CASE STUDY OF FEDERAL GOVERNMENT*
*GIRLS SECONDARY SCHOOL, BIDA.*

*BY*

*PATRICK CHIMEZIE OSUJI*
*PGD/MCS/097/96*

*SUBMITTED TO*

***THE DEPARTMENT OF MATHS/COMPUTER SCIENCE***
**FEDERAL UNIVERSITY OF TECHNOLOGY**
**MINNA**
**NIGER STATE**

IN PARTIAL FULFILLMENT OF THE REQUIREMENT
FOR THE AWARD OF POSTGRADUATE
DIPLOMA IN COMPUTER SCIENCE

*MARCH, 1998.*

# CERTIFICATION

This project, School sports record Program has been read and approved by the undersigned on behalf of the Department of Maths/Computer Science, Federal University of Technology, (F.U.T.) Minna. as meeting the requirement for the award of Postgraduate Diploma in Computer Science.

Dr K.R. Adeboye
HEAD OF DEPARTMENT

Date _____

Dr S.A. Reju
PROJECT SUPERVISOR

Date 05-03-98

EXTERNAL EXERMINER

Date _____

# DEDICATION

This project is dedicated to our son and daughter, Godson and Peace

# ACKNOWLEDGEMENT

I am grateful to our Lord Jesus Christ for giving me the opportunity to study Postgraduate diploma in computer science of the Department of Maths/Computer Science of the Federal University of Technology, Minna. Glory be to His name for ever an ever! Amen.

Special thanks goes to our able and dynamic Head of Department, Maths/Computer Science, who granted me the opportunity to attend this PGD in Computer Science and also my lecturer in Operation Research. May the Almighty God reward you abundantly.

My sincere thanks goes to Dr R.A. Reju, who is my project supervisor for devoting his limited time to reading and correcting this work where necessary. He is also my lecturer in Algorithm and Operating System. May God bless you in Jesus name!

I am equally indebted to the following lecturers, Prince R. Badmus, PGD in Computer Science course co-ordinator and he is also my lecturer in Introduction to computer Science and System Design and Analysis; Dr Y.M. Aiyesimi who is my lecturer in Mathematics and Numerical Analysis: Mr Kola Raimi, my lecturer in Programming and Data Base IV plus; and Mr I.K. Adebowale my lecturer in Pre-written packages. To every one, whether mentioned or not, I say thank you an may God guide you in all your undertakings.

Part of this work is supported by National Cereals Research Institute, Badeggi. My thanks goes to the management.

# TABLE OF CONTENT

PAGE

Title ..... i.

Certification ..... ii.

Dedication ..... iii.

Acknowledgment ..... iv.

Table Of Content ..... v.

List Of Tables..... vi.

Abstract ..... .... vii.

Introduction ..... viii.

*CHAPTER ONE* Introduction to School Sports

1.0. The value of Sports..... 1.

1.1. Definition ..... 2.

1.2. Growth of sports in Nigeria culture .....2.

1.3. Root of School sports .....5.

1.4. Girls and Women in sports ..... 5.

1.5. Benefits .....6.

1.6. Other benefits .....6.

1.7. Some Educational benefits,.. questioned? . 7.

1.8. Athletic events in School sports .....7.

1.9. Equipments and facilities .....8.

*CHAPTER TWO* School Sports at the FGGSS, Bida ... 9.

2.0. History and development in Nigeria ..... 9.

2.1. Events in FGGSS, Bida ..... 10.

2.2. Notes on various events ..... 10.

2.3. Officiating ..... 12.

2.4. Safety in Athletics ..... 13.

2.5. FGGSS inter-house athletic competition... 13.

2.6. Progress in Performance ..... 15.

2.7. Awarding price ..... 16.

*CHAPTER THREE* 3.1 School Sports Record Design.. 17.

3.1 Problem definition and specification ..... 17.

3.2 System description..... 18.

3.3 Flow charting ..... 19.

*CHAPTER FOUR* School sports System Experimentation..29

4.1. Test data .....29.

4.2. Output of school sports record program .. 30.

*CHAPTER FIVE* 5.1. Documentation..... 38.

5.2. Limitation..... 41.

5.3 Observation ..... 41.

5.4. Conclusion ..... 41.

Selected References ..... 44.

Appendix 1. Program listing ..... 45.

Appendix 2. Hand annotated program segment .49.

List of tables and figures

Table 1.1. Sequence of school sports meeting .... 4.

Table 2.1 Event Score board ..... 14.

Fig. 2.2 Position Score board ..... 15.

Fig. 2.3 Table of record for 1986 & 1996 .. 16.

Fig. 2.4 Sequence of overall winners ... 16.

Fig.3.1. Common Flow chart symbols..... 20.

Fig.3.2. Flow chart from system description... 21.

Fig.3.3. Pre programming flow chart ..... 23.

Fig.3.4. Program flow chart ..... 24.

Fig.3.5. Sectoral built up ..... 27.

Fig.3.6. Variables used in Sports Record Program . 50.

# ABSTRACT

Selecting the winning teams is a common feature in sports festivals. The usual procedure is to add up all points for each competing team and claim that the winning teams are those with the highest points as displayed in a manual league table. The objective, is, with the availability of microcomputers,to computerize School sports records (interactive computing). In the manual league table, entry are manipulation of all information including competitors names, competitors teams, and team positions in an event. Scoring or awarding of points and totalling and positioning are carried out manually while in this computerized version only competitors names, team/house number and event number are required to be fed into the computer, other information and manipulation will be left to the computer.

The advantage here is that after each event, points are awarded, totalled and the team position will be sorted in descending order, and any one can use this program, keying in the answers in response to each question. At the end, the result is immediately available, if required otherwise it can be stored.

Computers have been used in education for many years and I recommend that schools with computers should use their computing facilities for sports records.

Key Words:- **Event, teams/house, league table, points competitors, Athletic, sports, race, QBASIC.**

# INTRODUCTION

Every body knows that there is more than one way to solve most problems and that it is not always the obvious way that is the best, and also that data has been handled manually for centuries.

Totalling up of column of figures has, until the arrival of calculator in the early part of the century, relied on the ability of a person to count and memorize and not to make mistake!.

In sports that compare the performance of each athlete and team / house, there is need for testing. This has been done manually on the score board or league table. This procedure has a drawback that, if many teams, athletes and events are involved, then a substantial amount of time is taken for awarding of points and totalling.

To overcome these problems, the use of microcomputers in testing procedure is available for schools that have computers. Such testing reduces the amount of time wasted and human error.

The problem is to computerize the school sports records, so that if the result of each race is fed into it the computer will award and total the points obtained by each competing team / house and produce a league table sorted in descending order of winning. The program is written in QBASIC programming language environment.

The case study encompassed the annual inter-house athletic competition in the Federal Girls Secondary School (FGGSS), Bida. Niger State, Nigeria.

# CHAPTER ONE

## INTRODUCTION TO SCHOOL SPORTS

1.0 The value of sports

In the 16th century, the French authur Montaigne, in his essay on the education of boys, recommended, that sports and games play a major role in the educational program for young men. "I would have a graceful exterior combined with a tactful manner; the body and mind should be fashioned at the same time; it is not the body, it is not the soul that is being tamed; it is the man, they should not be separated. That philosophy is just as valid today, applying equally to young women. Athletics and the positive physical, psychological, educational, moral and social benefits derived from athletic competition provide the opportunity to fulfil some of the objectives recommended by Montaigne. Desirable Traits of character are developed through sports such as sportsmanship, observance of rules of the game, self control and a spirit of fair play. Team playing encourages co-operation, leadership, fellowship, and a team spirit. Participation in sports individually or as a member of a team is a preparation for life.

1.1 DEFINITION

Sports has been defined in many ways, Francis Logan Paxson, a historian called it safety valve for the society. Levis Munford, labelled it "one of the mass duties of the machine age and Webster's dictionary defines sports as a positive diversion, and says it is synonymous with fun.

Sports means a particular form of outdoor exercise such as athletics,swimming or a game such as football or tennis.

## 1.2 Growth of Sports in Nigerian Culture

Sports has captured the thumbs of Nigerians. Millions of Nigerians are glued to their chairs when featured athletics, football, handball and basketball contest are scheduled. In addition to the impact of T.V. on sports, astronomical sum of naira are spent by professional organization to obtain the best college talent to their team. Sports symbols have infiltrated into Nigerian languages, art, politics, education and religion.

Sports has an interesting history in Nigeria from the time of colonial days when sports for sports sake was frowned on, until when sports has become big business. There has since been a steady growth of this phase of Nigerian culture.

## 1.3 Root of School Sports

The expatriates came to Nigeria and introduced recreational games like lawn tennis, football etc into schools. The establishment of formal schools brought about more organized sports. To them it was another venue to promote oneness, apart from religion. These sports followed the same trend as to what happened in England in the 19$^{th}$ century. From 1890 to 1930 some Government model schools where established. The need to provided an avenue through which school children will gather, brought about the Empire day celebration in 1933 which was celebrated on every 24th of May. In 1910 the Director of education, southern province, Mr E. J. Rowson donated a shield and the schools that contested for it at Ibadan were St Andrew's College Oyo, Wesley College Ibadan, C.M.S Training Institute,

Oshogbo and Baptist College and Seminary, Ogbomosho. In 1919 there was a big inter-school sports competition in the eastern province and twelve schools contested for the Peace challenge shield in Calabar. This was held on the 11th November of every year and called Armistice day.

The British representatives were looking for an avenue to unite the North and South, so, Mr E.R.G. Huwsy, the then director of education in Nigeria, dominated a shield to be contested for amongst both protectorates. The first competition was held on 1st May 1933 at Government college, Ibadan, and the second in 1934 in Kano city.

This type of athletic meeting continued until after independence of 1960, when in 1976, a major step to develop sports in Nigeria was taken to inaugurate the National School Sports Federation (NSSF). In 1976 Anambra State hosted the 1st All-Nigeria Secondary Schools game in Enugu. This competition was an annual event. Competition in each state begins at the local government level and progresses to state level. Those who qualify in each state converge at a named state venue for the all-Nigeria secondary schools games. The aim of the competition include:-

1. Development and promotion of healthy sports competition in all primary and post primary institution in Nigeria.
2. Promotion of social, cultural, economic, political and religious interaction and understanding among the youths of the country.
3. To train young athletes who will represent Nigeria in international competitions thereby fostering unity and understanding between Nigeria and other nations.

4. To ensure adequate fitness for Nigerian youths who are looked upon as leaders of tomorrow.

Since inception in 1976, the sequence has been as follows:-

1. 1976 Zoned.
2. 1977 Zoned.

| | | | |
|---|---|---|---|
| 3. Calabar | '78 | Calabar | Cross River. |
| 4. Arugu | '79 | Owerri | Imo State. |
| 5. Kwaspo | '80 | Ilorin | Kwara State. |
| 6. Legelu | '83 | Ibadan | Oyo State. |
| 7. Kada | '85 | Kaduna | State |
| 8. Gurara | '86 | Minna | Niger State. |
| 9. Coal City | '87 | Enugu | State |

Table 1.1 Sequence of school sports meeting

Obviously, these objectives can best be achieved when the church, school, home and other institutions in the community work closely together for their goal.

It is suffice to say here that the pre-competition stage starts at the inter-house sports competition of secondary schools, then followed by the intra-school sports competition of the secondary schools in a town, before proceeding to the local government level, etc.

## 1.4 Girls and Women In Sports

Times has changed when in the 1st Olympic games held in 776 B.C. in ancient Greece, women were not even permitted to be spectators on Mount Olympus. Those who had the audacity to peek and were caught lost their lives. They were thrown to their death from the highest peak of a giant rock. Years later when the modern Olympics were started by Pierre du Combertin, women were still not permitted to participate in any event.

Today, a different picture appears not only on the olympics, where many events are open to women but also throughout the sports world - professionals, amateurs and in schools and colleges. More sports opportunities are provided to girls and women, making it possible for them to participate in many different sports on local levels as well as on higher competitive planes. This increased participation of girls and women in sports has resulted in many favorable reactions as well as criticisms and problems. The National School Sports Federation has indicated that female sports participation were increasing in schools and colleges. However women do not still participate in events such as triple jump, pole vault and hammer throws.

## 1.5 BENEFITS

Sports has valuable contributions to make to total educational programme of the school. Its contribution is built upon the specific objectives of development.

(a) Physical Fitness:- Components of physical fitness such as strength, speed, endurance, agility and co-ordination are developed.

(b) Skill:- The acquisition of skill through sports leads to a high level of proficiency and skill is essential to achievement in sports arena and result in recognition, a feeling of belonging, acknowledgment and other psychological benefits for participants.

(c) Individual Development:- Self discipline, self realization, self control and a desire to achieve are individual qualities developed from sports.

(d) Social Development:- An individual must first compete with other members of the team for a position, then must cooperate with team mates when he compete with others. The playing field will provide a place for fairness, adherence to rules, understanding and respect to others and the ability to accept decision and defeat.

1.6 OTHER BENEFITS:- Sports are a source of fun and enjoyment and an acceptable outlet for excess energy. They provide a common band for unifying a school and student body, keeping student from dropping out of school, provide an opportunity to learn more thought while skill, develop physical ability and fitness and test a broad range of physical, interpersonal, leadership and intellectual skill. Furthermore some references suggest that sports build confidence and improve self concepts. In practical sense, it is pointed out, they provide opportunities for scholarships and success that lie outside the formal academic structure.

## 1.7 Some Educational Benefits Claimed For Sports Are Questioned:-

Research evidence has questioned the claim by coaches and sports enthusiasts that claim certain behavioral changes that take place in those people who participate in sports. Some studies suggest that athletes may possess many personality traits and characteristics that are more socially desirable than those possessed by persons who do not participate in athletics. However evidence from researchers such as Mac Afee, Olgivie, Seynoir and Whittle, suggests that persons who participate in sports probably already possess these personality traits and do not develop such qualities as a result of their athletic participation.

## 1.8 Athletic Events In School Sports:-

Track and field events can be put into three main categories. There are more than twenty events in all:-

(a) Tract events:- They are made up of

(1) Sprints :- 100 m, 200 m, 400 m, etc

(2) Middle distance races:- 880 m, 1500 m

(3) Long distance races:- 5000 m, cross country.

(4) Hurdles:- 110 m, 220 m, 440 m.

(5) Steeple Chase:- 3000 m

(6) Relays:- 4*100 m, 4*200 m, 4*400 m.

(b) Field events:- These include,

(1) Jumps:- Long, high and triple jumps,pole vault.

(2) Throws:-Shot put, discuss, javelin, hammer.

(c) Combined events:-

(1) Decathlon, pentathlon, tug-of-war.

1.9 Equipments and Facilities:-

The basic equipment and facilities for track and field athletics are as follows:-

(1) The track:- Elliptical in shape and has two parallel straights, joined by two semi-circular bends. It is measured 400 m round. Different kinds of tract surfaces used are cinder, clay, asphalt,tartan. Tracks are mainly located outdoors.

(2) Shoes:- These varies depending on the event and the surfaces. In general, however, shoes should not fit tightly.

(3) The wears:- These include shots, track suits, vests and socks.

(4) Other equipments:- These depend on the type of event for example, vaulting pole, parallel bars, batons, discuss, javelin, shots (for shot put), starting blocks etc.

There are many other things associated with athletics such as, techniques and fundamentals, basic rules and regulations, officiating and safety hints in track and field events. Some of them may be discuss in the next chapter.

CHAPTER TWO

# SCHOOL SPORTS AT FGGSS BIDA

## 2.1 History and Development:-

One of the major steps to provide sound post primary education to Nigerian youths was the establishment of the unity schools known as the Federal government schools in different locations of the country. Some were for only boys and some were for only girls while others were for both boys and girls. The above named is one of these Secondary schools established for girls only. The first batch of students sat for the Senior secondary school certificate examination in May/June 1979. It is a boarding school and has four houses, namely, Queen Amina, Etsu Nupe, Nana and Niger. Their house colors are Red, Yellow, Green and Blue respectively.

The Federal government colleges Annual inter house sports competition is organized under the laws of the Amateur Athletic Association of Nigeria (A.A.A.). The A.A.A. was first formed in England in april 1860 as the first national governing body of athletic in the world. The Nigerian A.A.A. was formed just after independence of 1960.

The first annual inter house sports competition of FGGSS, Bida, was held in April 1979. The objective of the competition is directed to the encouragement of all FGGSS, Bida, students, to be interested and to participate in field and track events. The competition provides opportunities for amateur athletes to improve their performances. It also strengthens intra school integration, select athletes for outside competition, enable students

vie for prices and honor in athletics and ensure adequate fitness for FGGSS students. The competition is an annual event and takes place on any Saturday in the month of either March or April. The competition begins at the house level and progresses to the school level and it is organized in two categories namely junior girls participants, 15 years and below and senior girls participants, for girls above 15 years. The preliminaries are held before the finals, only few events are concluded on the sports day, while others are decided earlier on. The 18th annual Inter house sports competition was held on the 5th of April 1997. The management and expenses of the competition are the responsibility of the school authority, the P.T.A. that is parent teacher association and donations from prominent men and women in Bida.

2.3 Events In FGGSS Sports Competition

The events competed for and open to all students of FGGSS, Bida are:-

(a) 100 m and 200 m (junior & senior), Staff children race, Parents race,Invitation relay race for schools in Bida (4*100 m:jr & snr), School relay (4*100 m:jr & snr).

(b) 800 m and 400 m (jr & snr), 3000 m open, 4 * 400 m relay (jr & snr), also for senior and junior are high jump, long jump, javelin, discuss and shot put. The last is the marathon.

2.4 Notes On Various Events

In FGGSS, Bida the annual inter house sports competition are governed by rules laid down by A.A.A. of Nigeria and here are some precise information:-

Running:- (1) Each competitor has her own lane (six lanes being used here) in all straight races (100, 200, 400 m ).

(2) All races are started by the report of a piston, the time keeper takes the time from the flash.

(3) If a competitor moves either his hand or feet from the ground before the piston is fired the start is considered a false one. Any competitor being responsible for two false start is disqualified.

(4) Wilful jostling or obstructing another competitor during a race entails disqualification.

(5) The winner of a race is the runner whose torso (not head, arms or legs) first reaches the finish line.

High Jump:- Three attempts are allowed at each height. Three consecutive failures debar from further competition. Competitors must take off from one foot.

Long Jump:- The jumps are measured from the outer edge of a take-off board (20 cm wide) to the nearest break in the ground made by any part of the body. Here three jumps are allowed for each competitor, the first three competitors being allotted three more.

Shot Put:- The weighs for women is 4 kg and is put from a circle 2.13 m in diameter. One hand is used and the competitor must not leave the circle until the shot has landed and then only from the rear half.

Throwing the Javelin:- Thrown from an arc at least 8 m long. Length of women's javelin is 220 - 230 cm, and weight is 600 g. The point of the javelin must strike the ground first.

Throwing the Discuss:- Weight is 4 kg; diameter is 95 - 110 mm and is thrown within 60 degrees sector.

2.5 OFFICIATING:-

The following are the officials / committee and their duties considered necessary by FGGSS, Bida for their annual inter-house sports competition. Most of them are members of the academic and non-academic staff and students:-

(1) Referee:- She is in-charge of the entire competition. She is the co-ordinator of all the activities and is responsible for the proper carrying out of the programme and she is the school's physical & health education teacher.

(2) Secretary:- She is in charge of all administrative arrangements and shall receive and conduct all invitee and correspondences relating to the competition.

(3) Clerk of the Course:- Is responsible for seeing that the tracks, runways, circles, arcs, sectors and pits for field events are properly laid out and to provide all equipments at their places.

(4) The Field Judges :- They supervise the field events and enforces the rules of field events.

(5) The Starter:- Starts all track events and penalizes the contestants jumping the gun twice.

(6) Judges of the Finish:- They pick contestants at the finish of all races.

(7) Timers:- Are to time the winners of each race.

(8) Inspectors:- They are stationed around the tracks to pick contestants who infringe the rules of the competition.

(9) Score Keeper:- They record the result of each event.

position. The first three in the first and second heat that is six competitors in all will then be presented for the finals for that event. However it should be noted that selection is strictly based on the time of finish. So that the final six contestants must be those that finished in the shortest time.

The events listed in group B of section 2.3. are concluded before the school annual inter-house sports day competition. Only events of group A are featured on the sports day. This is because this is what the available time can allow. Coaching is acheived by the use of all the school's physical and health education teachers.

The Score Board: There are two score boards,for the display of results of the competition, the event and the position score boards and are shown below.

**1997 Annual Inter-house Sports Competition**

| EVENT | NAME | HOUSE | POSITION |
|---|---|---|---|
| 100 m Snr | Bose<br>Elizabeth<br>Jummai | Q/Amina<br>Niger<br>E/Nupe | 1st<br>2nd<br>3rd |
| 100 m jr | Ngozi<br>Ladi<br>Bola | E. Nupe<br>Niger<br>Q. Amina | 1st<br>2nd<br>3rd |

Fig 2.1 Event Score Board

| EVENTS | Q. Amina | E. Nupe | Nana | Niger | Total |
|---|---|---|---|---|---|
| 400 m snr. | 5 | 1 | 0 | 3 | 9 |
| 100 m jnr. | 3 | 0 | 5 | 1 | 9 |
| 4*100 m jnr. | 2 | 10 | 6 | 0 | 18 |
| High Jumpjnr. | 3 | 5 | 1 | 0 | 9 |
| Javelin Snr. | 0 | 1 | 5 | 3 | 9 |
| Discuss Jnr. | 3 | 5 | 0 | 1 | 9 |
| Long Jump jr. | 1 | 3 | 5 | 0 | 9 |
| 220 m snr. | 5 | 0 | 1 | 3 | 9 |
| House Totals | 22.00 | 25.00 | 23.00 | 11.00 | 81.00 |

Fig 2.2 The Position Score board

It follows that the 1st contestant is awarded 5 points the second three points and the 3rd contestant 1 point. This scoring is for individual events such as 100 m race, javelin, etc. The scoring is doubled for team events such as relay race. Also the above table show the over all winner to be Etsu Nupe house, followed by Nana house and the 3rd is Queen Amina house.

2.8 Progress In Performance

Tables of school records for 1986 and 1996 is perhaps the best way of showing the extraordinary progress made during these periods. It must however be said, that this progress was very largely due to the enormous increase in the number of student participation and greatly improved method of training.

| EVENTS (snr) | RECORDS 1986 | RECORDS 1996 |
|---|---|---|
| 100 m | 10.9 sec | 10.8 sec |
| 800 m | 2 min 17.4 sec | 2 min 10.2 sec |
| High Jump | 5.3 ft | 5.9 ft |
| Long Jump | 19.0 ft | 20.5 ft |
| Shot put | 47.0 ft | 55.0 ft |
| Discuss | 158.0 ft | 179.0 ft |
| Javelin | 153.0 ft | 180.0 ft |

Table 2.3: Table of FGGSS, Bida Records for 1986 and 1996.

2.9 Awarding Price:

At the end of the school annual inter-house sports competition prizes, cups, certificates and ram are given out as follows:-

The overall winner and best house is given a giant cup, a certificate and a ram usually donated by Alhaji Bagudu Waziri, the Dwafu of Nupe.

The second is given a medium sized cup and a certificate While the 3rd is given only a small cup.

Winners in individual events are given certificates and gifts like biros, pencils and books.

Since inception in 1979, some of the sequences in recent times has been as follows:-

| Year | House | Position |
|---|---|---|
| 1997 | E. Nupe | Overall winner |
| 1996 | Niger | Overall winner |
| 1995 | E. Nupe | Overall winner |
| 1994 | Q. Amina | Overall winner |
| 1993 | Niger | Overall winner |

Table 2.4 Sequence of Overall Winners in recent times

# CHAPTER THREE

## 3.1 Sports Record System Design

Programming is only the computer's method of solving problems. Programmers seek answers to key questions in developing programs whose resolution could lead to solution of problems using computers. Programs must be designed precisely and logically when answers to these key questions are known. The key questions are;

(a) Is the problem capable of being solved by computing techniques ?.

(b) Is the problem clearly and un-ambiguously defined ?.

(c) Are all the data required for a complete solution available ?.

All these questions have to be verified or disproved through experimentation.

## 3.2 Problem Definition And Specification

Let us see how this could be realized in terms of real problems. The problem is to computerize the school sports record so that if the result of each race are fed into it the computer will total the points obtained by each competing team/house and calculate the winning team. On the face of it, this seems a straight forward problem which can certainly be solved using a computer, but is the problem clearly defined ? when is the result required ? After each race ? After the last race ? How are the points awarded ? (they are needed for calculation) What will the data input be and what form will it be?. These questions, at least, must be answered before the problem can be defined clearly and should result in the problem being re-written as :-

This program is to provide the up-to-date point total of each team/house and their relative positions in a 'league table' as soon as possible, after each event and a final total and position table at the end of the school sports competition. The specification will include these details

(a) The first three in each event will be awarded 5, 3, and 1 points respectively.

(b) The result of each event will be written on a special form which will contain the competitors names and team numbers in order of finishing.

(c) As an up-to-date team/house positions are required after each event, the mode of operation must be interactive. Including the competitors name is a bonus as it is not included in the output.

3.3 System Description

The problem defined above is going to be considered in terms of input, process and output, but not in that order. Any system must be designed considering the output first, then the input and finally the processing. In other words,

(a) What do we want to get out of the program?.

(b) What have we got to put in, in order to get this output?.

(c) What processing is necessary in order to achieve this?.

Therefore, the correct sequence of the three main events above, in designing a system is, output, input, processing. Continuing the example of the school sports record program, a more detailed attempt at a system description could be:-

Output: The team/house numbers and their individual point

total, sorted in a league table, that is, updated league table showing team/house number and total points gained by each team/house (formatted output with headings).

Input: The names and team/house number of the first three in each event (only one competitor per team allowed in each event). What happens if there are fewer than three teams/houses competing in an event? Can this be allowed in the program. Processing: Add points to correct team/house points counters and resorts so that the team with the greatest point is at the top of the list. This require one counter per team/house (counter and team number to be linked). The correct counter are to be incremented by point input after each race, then sorted so that the team with the highest points total is at the top of the list. Remembering that the vital question to be answered is, will it solve the problem?. If the answer is 'yes' then we go to the next stage which is to draw the system description in a more organized and standard manner in the form of a flow chart.

3.4 Flow charting

A flow chart is a graphical representation of the operations involved in the solution of a problem. Symbols are used to represent particular operation or data, and flow lines indicate the sequence of operations and flow of data. To make the job of writing the program much easier we need to draw the 'system' as a flow chart. This enable us to think out our problem in a logical manner, to set down our ideas precisely, to show the step in the process of solution and to have a diagrammatic solution to the problem

which can be followed and understood by someone with no knowledge of program writing. As well as above, flow charting teaches us some important computer concepts which will arise in most of our program writing. For example if there are two possible answers to any question and if the correct answer is not the first, then it must be the second. We will see some of these ideas in the flow chart. Standard symbols are used to indicate the different operations. The most common ones are shown below:

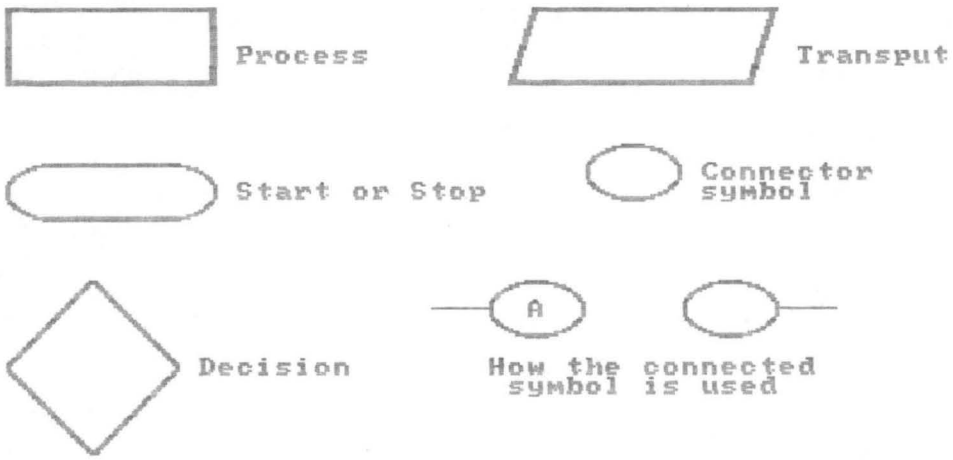


Fig 3.1. Common Flow chart Symbols

Every flow chart must show its beginning and ending. There are more than one stop symbol. Data is transput to and from a process using the transput symbol. Any process such as calculation, sorting, initialization, etc, is shown in the process symbol. The decision symbol always ask a question usually with two possible answers. The connector symbol is used to continue a flow line from one to another or to show connection between two parts of a flow line on the same page rather than crossing other parts of the flow

chart. Lines joining the symbols together indicate the flow of process or data. Arrows should only be used to indicate the flow when they are necessary to avoid ambiguity. The flow chart for the school sports record project will be produced directly from the system description of section 3.2.

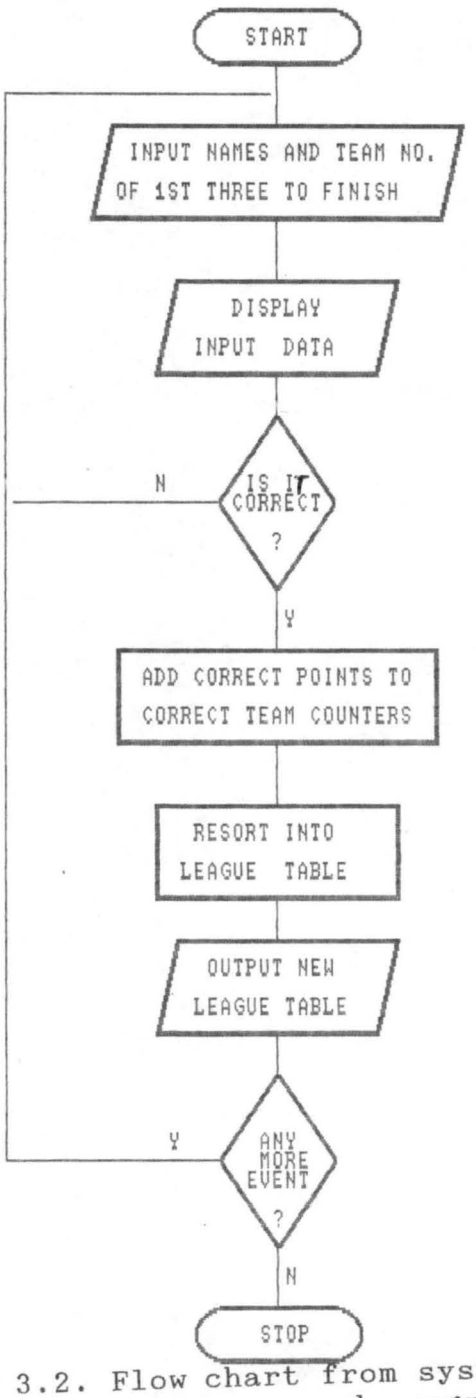


Fig 3.2. Flow chart from system description of school sports record program

The word 'next' in the input box is a commonly used word and enables any event to be referred to, even if it is the first event. It should also be appreciated that, although the transput boxes are defining single operations, the process boxes are describing operations which may require many other actions in order to complete the stated operations. This expansion of the process boxes is the next step towards the final flow chart.

Sorting is a standard procedure and can be considered as a routine to be executed every time new results are input. Thinking ahead to writing the program, the sorting procedure can clearly be made into a subroutine as shown in the detailed version of the program flow chart. (see Fig 3.3). Coming to the main process box-'add correct points to correct team counter'-There is need to decide how the correct points are to be 'attached' to the teams placed first, second and third. It is assumed that 5, 3 and 1 points are to be awarded for 1st, 2nd and 3rd places in every event, so one way of achieving this is simply to add five points to the winning team total, three points to the team coming second and one point to the third team for every event.The teams are identified by numbers and the first process box can then be as shown in fig 3.3

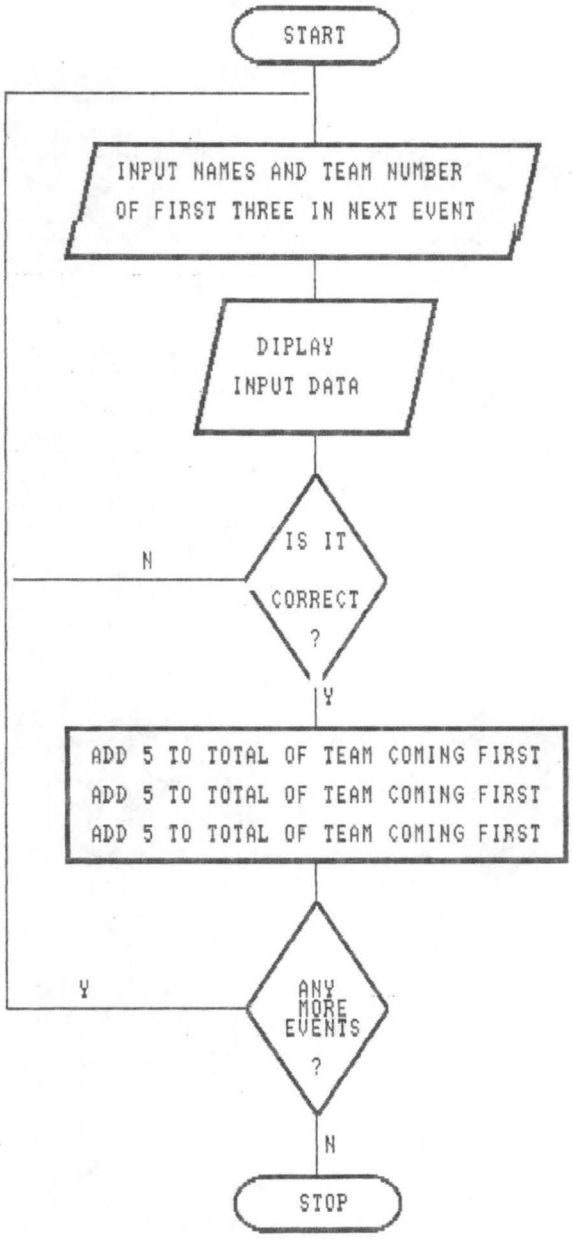


Fig 3.3 Pre-programming flow chart.

This is still a 'system flow chart' and as yet has nothing to do with programming.

The next flow chart that follows is called a programming flow chart and the program is written almost directly from this flow chart. Signs and terms from QBASIC programming language are used and the full meaning of all variables and abbreviations used are given in Appendix 2.

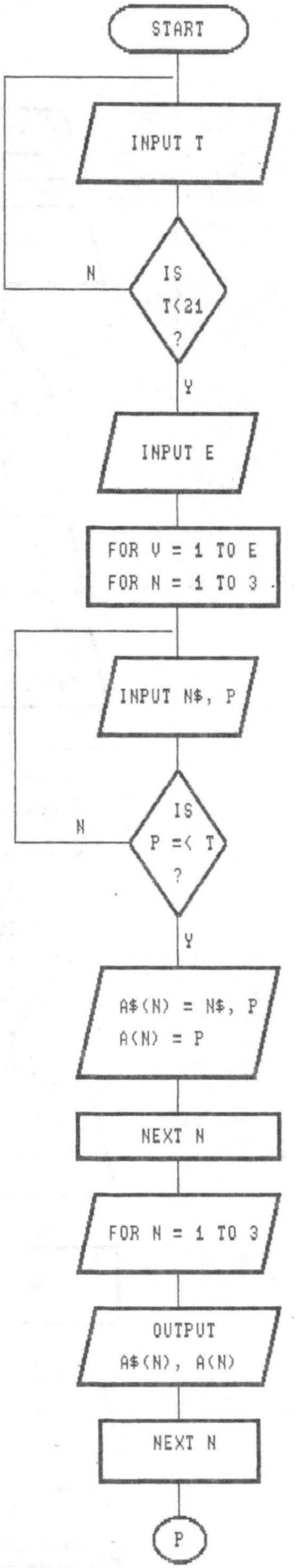
START
INPUT T
IS T<21 ?
N
Y
INPUT E
FOR V = 1 TO E
FOR N = 1 TO 3
INPUT N$, P
IS P =< T ?
N
Y
A$(N) = N$, P
A(N) = P
NEXT N
FOR N = 1 TO 3
OUTPUT A$(N), A(N)
NEXT N
P

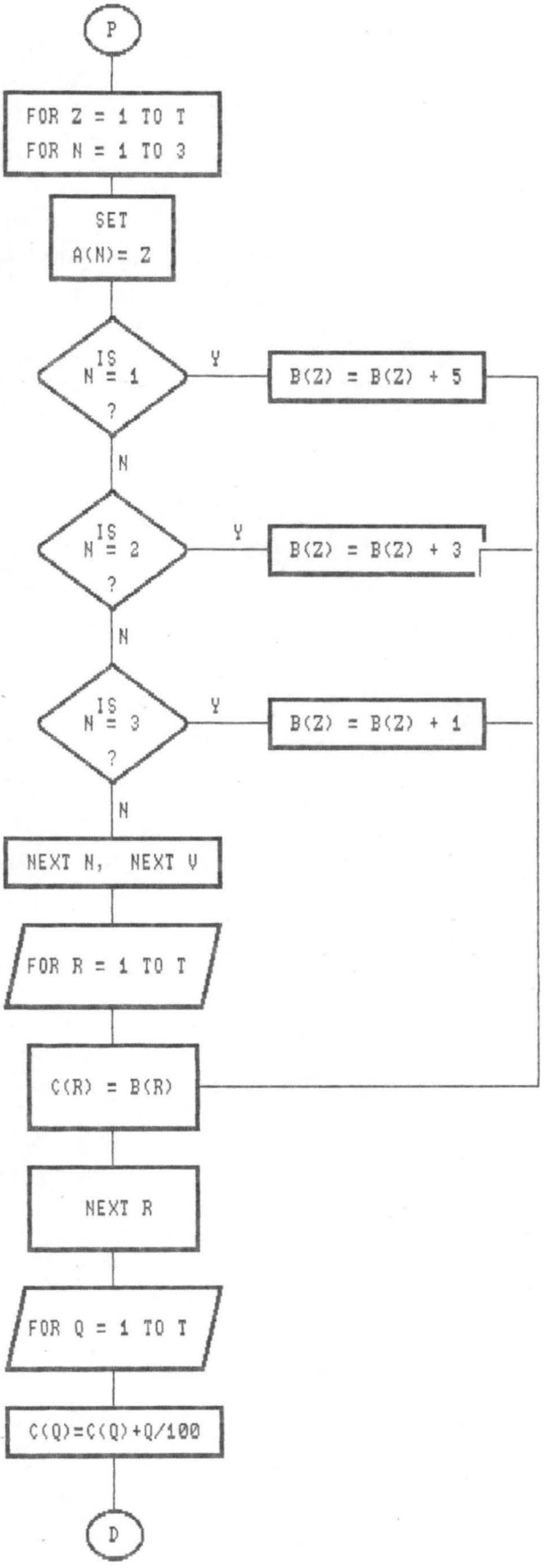
P
FOR Z = 1 TO T
FOR N = 1 TO 3
SET
A(N)= Z
IS
N = 1
?
Y
B(Z) = B(Z) + 5
N
IS
N = 2
?
Y
B(Z) = B(Z) + 3
N
IS
N = 3
?
Y
B(Z) = B(Z) + 1
N
NEXT N, NEXT V
FOR R = 1 TO T
C(R) = B(R)
NEXT R
FOR Q = 1 TO T
C(Q)=C(Q)+Q/100
D

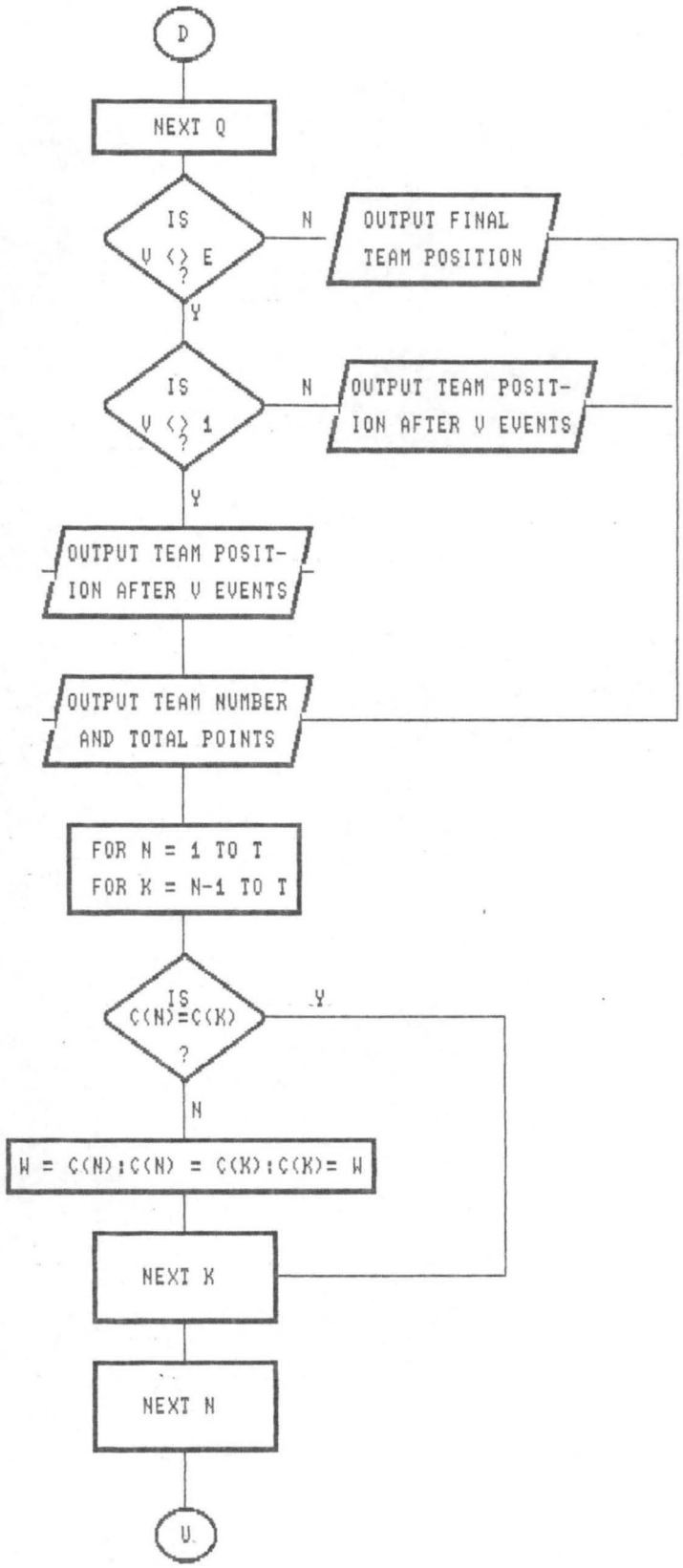
D
NEXT Q
IS V <> E ?
N
OUTPUT FINAL TEAM POSITION
Y
IS V <> 1 ?
N
OUTPUT TEAM POSITION AFTER V EVENTS
Y
OUTPUT TEAM POSITION AFTER V EVENTS
OUTPUT TEAM NUMBER AND TOTAL POINTS
FOR N = 1 TO T
FOR K = N-1 TO T
IS C(N)=C(K) ?
Y
N
W = C(N):C(N) = C(K):C(K)= W
NEXT K
NEXT N
U

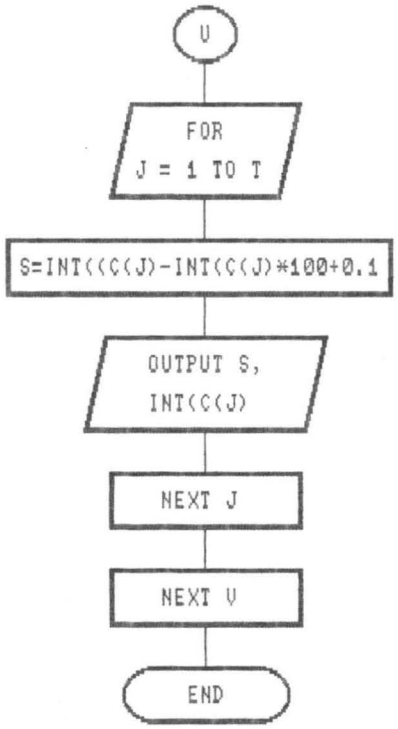


Fig 3.4 Program flow chart.
The following is the English language pseudo code sectoral buildup.

1. Event input.
2. Awarding points.
3. Test.
4. Score totalling.
5. Test.
6. Simple output - Teams and scores.
7. Test.
8. More than one event ?.
9. Test.
10. Improved output.
11. Test.

Fig 3.6 (continued)

12. Data verification.
13. Test data.
14. Improved output.
15. Sort routine.
16. Test.
17. Improved presentation (leaving screen and adjusting output).
18. Final testing and run.

Fig 3.6. Sectorial buildup.

# CHAPTER 4

## SPORT SYSTEM EXPERIMENTATION

In this program, when the answers to the key questions were provided, the program is then written in 'QBASIC' programming language environment, the testing evidence of this program include test results with a sample run using dummy data. This is achieved through experimentation.

4.1 Test Data: The use of test data in programming is to check that the program is correctly written and it has two main reasons.

(a) To check all the logical paths in the program.

(b) To check that the program produces the correct output.

In the school sports record program, four sets of data are required to test all the logical paths, although there are only three possible outputs and the test data was chosen carefully with this in mind.

In order to check that the program produces the correct output, dummy data are used and they are of same type as the real data, the program listing and the hand annotated program segment to indicate the purpose of the various sections of the school sports record program are in Appendix 1 and 11 respectively. In the sample run the four sets of data are:- (1) Names of competitors.

(2) Number of events (ie athletic events and here there are eleven events namely) 100 m, 220 m, 440 m, High jump, Long jump, (for senior and junior girls) and the eleventh being javelin.

(3) Number of teams or houses in FGGSS, here there are ten teams (maximum is 20 teams/houses and minimum is 4 house)
(4) Positions of competitors in an event and here it is the first three positions.

Instruction on how to load and use the school sports record program:- the program is stored in a diskette, under the file name NCRI-BIDA after booting the computer type a: press enter; then type dosshell press enter; press shift F9 key; type QBASIC press enter; press TAB key; press Alt key; type O press enter and lastly type 'NCRI-BIDA",press enter. After a few seconds, the system will display the school sport record program. Now set the printer ready and press F5. All further instructions will be given on the Video Display Unit.The test result of a sample run from the school sports record program with dummy data, is shown below:-

Run

SCHOOL SPORTS RECORD

How many teams are competing- max 20 ? 10

How many events are there ? 11

EVENT NO. 1

NAME & TEAM NUMBER OF 1 TO FINISH
? DOLLY, 8
NAME & TEAM NUMBER OF 2 TO FINISH
? KOLA, 3
NAME & TEAM NUMBER OF 3 TO FINISH
? NMA, 10

PLEASE CHECK THE DATA YOU HAVE JUST ENTERED. IF IT IS CORRECT, TYPE YES AFTER THE PROMPT

| NAME | TEAM NO. |
|---|---|
| DOLLY | 8 |
| KOLA | 3 |
| NMA | 10 |

DATA CORRECT ? yes

Fig 4.1 (Continued)

TEAM POSITION AFTER 1 EVENTS

| TEAM NO. | TOTAL POINTS |
|---|---|
| 8 | 5 |
| 3 | 3 |
| 10 | 1 |
| 9 | 0 |
| 7 | 0 |
| 6 | 0 |
| 5 | 0 |
| 4 | 0 |
| 2 | 0 |
| 1 | 0 |

EVENT NO. 2

```
NAME & TEAM NUMBER OF 1 TO FINISH
?  IFEDI, 2
NAME & TEAM NUMBER OF 2 TO FINISH
?  BUMMI, 9
NAME & TEAM NUMBER OF 3 TO FINISH
?  JUMAI, 6
```

PLEASE CHECK THE DATA YOU HAVE JUST ENTERED. IF IT IS CORRECT, TYPE YES AFTER THE PROMPT

| NAME | TEAM NO. |
|---|---|
| IFEDI | 2 |
| BUMMI | 8 |
| JUMAI | 6 |

DATA CORRECT ?  yes

TEAM POSITION AFTER 2 EVENTS

| TEAM NO. | TOTAL POINTS |
|---|---|
| 8 | 5 |
| 2 | 5 |
| 9 | 3 |
| 3 | 3 |
| 10 | 1 |
| 6 | 1 |
| 7 | 0 |
| 5 | 0 |
| 4 | 0 |
| 1 | 0 |

Fig 4.1 (Continued)

```
                        EVENT NO. 3

NAME & TEAM NUMBER OF 1 TO FINISH
?  CHIDI, 5
NAME & TEAM NUMBER OF 2 TO FINISH
?  BABA, 1
NAME & TEAM NUMBER OF 3 TO FINISH
?  FOLA, 10

PLEASE CHECK THE DATA YOU HAVE JUST ENTERED. IF IT
IS CORRECT, TYPE YES AFTER THE PROMPT

  NAME        TEAM NO.

 CHIDI          5
 BABA           1
 FOLA          10

 DATA CORRECT ?  yes

TEAM POSITION AFTER 3 EVENTS

TEAM NO.       TOTAL POINTS

        8              5
        5              5
        2              5
        9              3
        3              3
        1              3
       10              2
        5              1
        7              0
        4              0

                        EVENT NO. 4

NAME & TEAM NUMBER OF 1 TO FINISH
?  GANA, 4
NAME & TEAM NUMBER OF 2 TO FINISH
?  KEKE, 7
NAME & TEAM NUMBER OF 3 TO FINISH
?  SHOLA, 6

PLEASE CHECK THE DATA YOU HAVE JUST ENTERED. IF IT
IS CORRECT, TYPE YES AFTER THE PROMPT

  NAME        TEAM NO.

 GANA           4
 KEKE           7
 SHOLA          6

 DATA CORRECT ?  yes
```

Fig 4.1 (Continued)

TEAM POSITION AFTER 4 EVENTS

| TEAM NO. | TOTAL POINTS |
|---|---|
| 8 | 5 |
| 5 | 5 |
| 4 | 5 |
| 2 | 5 |
| 9 | 3 |
| 7 | 3 |
| 3 | 3 |
| 1 | 3 |
| 10 | 2 |
| 6 | 2 |

EVENT NO. 5

```
NAME & TEAM NUMBER OF 1 TO FINISH
?  KEMI, 2
NAME & TEAM NUMBER OF 2 TO FINISH
?  DORA, 1
NAME & TEAM NUMBER OF 3 TO FINISH
?  IJE, 10

PLEASE CHECK THE DATA YOU HAVE JUST ENTERED. IF IT
IS CORRECT, TYPE YES AFTER THE PROMPT

  NAME        TEAM NO.
 KEMI          2
 DORA          1
 IJE          10

 DATA CORRECT ?  yes
```

TEAM POSITION AFTER 5 EVENTS

| TEAM NO. | TOTAL POINTS |
|---|---|
| 2 | 10 |
| 1 | 5 |
| 8 | 5 |
| 5 | 5 |
| 4 | 3 |
| 10 | 3 |
| 9 | 3 |
| 7 | 3 |
| 3 | 3 |
| 6 | 2 |

Fig 4.1 (Continued)

```
                    EVENT NO. 6

NAME & TEAM NUMBER OF 1 TO FINISH
?  MARY, 3
NAME & TEAM NUMBER OF 2 TO FINISH
?  JANE, 5
NAME & TEAM NUMBER OF 3 TO FINISH
?  LOLA, 9

PLEASE CHECK THE DATA YOU HAVE JUST ENTERED. IF IT
IS CORRECT, TYPE YES AFTER THE PROMPT

  NAME        TEAM NO.
  MARY          3
  JANE          5
  LOLA          9

 DATA CORRECT ?  yes

TEAM POSITION AFTER 6 EVENTS

TEAM NO.       TOTAL POINTS

        2              10
        1               8
        8               8
        5               6
        4               5
       10               5
        9               4
        7               3
        3               3
        6               2

                    EVENT NO. 7

NAME & TEAM NUMBER OF 1 TO FINISH
?  UZO, 4
NAME & TEAM NUMBER OF 2 TO FINISH
?  TOLA, 6
NAME & TEAM NUMBER OF 3 TO FINISH
?  LEKE, 7

PLEASE CHECK THE DATA YOU HAVE JUST ENTERED. IF IT
IS CORRECT, TYPE YES AFTER THE PROMPT

  NAME        TEAM NO.
 UZO            4
 TOLA           6
 LEKE           7

 DATA CORRECT ?  yes
```

Fig 4.1 (Continued)

TEAM POSITION AFTER 7 EVENTS

| TEAM NO. | TOTAL POINTS |
|---|---|
| 2 | 10 |
| 1 | 10 |
| 8 | 8 |
| 5 | 8 |
| 4 | 6 |
| 10 | 5 |
| 9 | 5 |
| 7 | 4 |
| 3 | 4 |
| 6 | 3 |

EVENT NO. 8

```
NAME & TEAM NUMBER OF 1 TO FINISH
?  POLLY, 1
NAME & TEAM NUMBER OF 2 TO FINISH
?  HANA, 3
NAME & TEAM NUMBER OF 3 TO FINISH
?  YAYA, 6

PLEASE CHECK THE DATA YOU HAVE JUST ENTERED. IF IT
IS CORRECT, TYPE YES AFTER THE PROMPT

  NAME        TEAM NO.
  POLLY         1
  HANA          3
  YAYA          6

 DATA CORRECT ?  yes
```

TEAM POSITION AFTER 8 EVENTS

| TEAM NO. | TOTAL POINTS |
|---|---|
| 3 | 11 |
| 1 | 11 |
| 4 | 10 |
| 2 | 10 |
| 5 | 8 |
| 6 | 6 |
| 8 | 5 |
| 9 | 4 |
| 7 | 4 |
| 10 | 3 |

Fig 4.1 (Continued)

```
                        EVENT NO. 9

NAME & TEAM NUMBER OF 1 TO FINISH
?  SELINE, 7
NAME & TEAM NUMBER OF 2 TO FINISH
?  DORA, 3
NAME & TEAM NUMBER OF 3 TO FINISH
?  ROSE, 9

PLEASE CHECK THE DATA YOU HAVE JUST ENTERED. IF IT
IS CORRECT, TYPE YES AFTER THE PROMPT

  NAME        TEAM NO.
  SELINE        7
  DORA          3
  ROSE          9

 DATA CORRECT ?  yes

TEAM POSITION AFTER 9 EVENTS

TEAM NO.        TOTAL POINTS

        3              14
        1              11
        4              10
        2              10
        7               9
        5               8
        6               6
        9               5
        8               5
       10               3


                        EVENT NO. 10

NAME & TEAM NUMBER OF 1 TO FINISH
?  SERAH, 2
NAME & TEAM NUMBER OF 2 TO FINISH
?  FEMI, 5
NAME & TEAM NUMBER OF 3 TO FINISH
?  WALE, 6

PLEASE CHECK THE DATA YOU HAVE JUST ENTERED. IF IT
IS CORRECT, TYPE YES AFTER THE PROMPT

  NAME        TEAM NO.
  SERAH         2
  FEMI          5
  WALE          6

 DATA CORRECT ?  yes
```

Fig 4.1 (Continued)

```
TEAM POSITION AFTER 10 EVENTS

TEAM NO.        TOTAL POINTS

    2               15
    3               14
    5               11
    1               11
    4               10
    7                9
    6                7
    9                5
    8                5
   10                3

                EVENT NO. 11

NAME & TEAM NUMBER OF 1 TO FINISH
?  CHIDI, 4
NAME & TEAM NUMBER OF 2 TO FINISH
?  ASEBE, 3
NAME & TEAM NUMBER OF 3 TO FINISH
?  YOMI, 2

PLEASE CHECK THE DATA YOU HAVE JUST ENTERED. IF IT
IS CORRECT, TYPE YES AFTER THE PROMPT

  NAME        TEAM NO.
  CHIDI         4
  ASEBE         3
  YOMI          2

 DATA CORRECT ?  yes

FINAL TEAM POSITION

TEAM NO.        TOTAL POINTS

    2               17
    3               16
    5               15
    1               11
    4               11
    7                9
    6                7
    9                5
    8                5
   10                3
```

Fig 4.1 School sports record program experimentation

# CHAPTER 5

## DOCUMENTATION

This is the complete description of the school sports record program. More than that, documentation is the complete record of the development, testing and use of the school sports record program. This is carried out in eight headings:-

(1) Identification

(a) Name of the program:- School sports record program.

(b) Name of programmer :- *Osuji P.C.*

(c) Date written:- February 1998.

(d) Programming language used:- QBASIC Microsoft Version 5.

(2) Description

(a) Purpose of the program: statement of the problem to be solved:- To find which team gains most points.

(b) Method of solution:- use matrix (array) to store each teams points which are sorted into a league after each event.

(c) Outline flow chart : see fig 3:1.

(d) Program listing, including annotations :see appendix 4.1.

(e) List of all variables used in the program stating the purpose of each variable:- see appendix 4.2.

(3) Input

(a) Description of the data required for input to the program and any special format :- names and team

number of first three in event.

(b) Any limit to the value of the data and the quantity to be input :- Program can be used up to 20 teams/house

(c) Details of any validation checks carried out by the program :- Immediately following data input, a formatted display of the input data will be presented on the Video Display Unit follow program prompts.

4. OUTPUT

(a) Statement of the normal output from the program:- An up-to-date league table will be displayed on the Video Display Unit after each event. A hard copy output is offered in the program. The time of output varies with the number of teams competing.

5. PROCESSING

(a) Description of main processing task:- the 1st three teams are awarded 5, 3 and 1 points respectively and these points are added to the appropriate team counters after the team numbers have been identified. After each event the counters are sorted into descending order of total points.

(b) Approximate time for processing:- approximately four seconds for 20 teams.

(c) Formulae used:- None

(d) Any unusual programming techniques:- the team identified (Q) is derived from the team number in line 610 and decoded to form S in line 820.

Boolean operators are used in line 550, 560 and 570.

6 COMPUTER ENVIRONMENT

(a) Mode of operation:- Interactive

(b) Type of computer for which program is written:- IBM PC- compatible computer.

(c) Computer or other software needed:- MS DOS (R) version 5 QBASIC compiler microsoft corp 1981 - 1991.

7. Testing Evidence

(a) Include test results with sample run using dummy data: see fig 4 : 1 and appendix 1.

8. USER INSTRUCTION

(a) Instruction on how to load and use the school sports record program:- the program is stored in a diskette, under the file name NCRI-BIDA after booting the computer type a: press enter; then type dosshell press enter; press shift F9 key; type QBASIC press enter; press TAB key; press Alt key; type O press enter and lastly type 'NCRI-BIDA",press enter. After a few seconds, the system will display the school sport record program. Now set the printer ready and press F5. All further instructions will be given on the Video Display Unit.

(b) Any limitation on the use of the program:- There are a maximum of 20 teams. If less than three teams finish in any event, input any letter for a dummy name and zero for the team number for any unfilled place.

(c) A clear list of error messages and default routines:- As the input data is validated before processing, and the program has built-in checks and error messages, no other error messages should be displayed.

## 5.2 LIMITATION

(a) The school sports result program accepts only one competitor per team/house.

(b) Only the first three teams are awarded points.

(c) Teams and events are identified by numbers only, because they are used for calculation.

(d) Total points obtained by a competitor is not included.

## 5.3 OBSERVATIONS

(A) Athletic competition in FGGSS, Bida, is made available to all students and not just to a few.

(b) Nana House is yet to be the overall winner in athletic competition of FGGSS, Bida since inception.

(c) Most of the invitee to the FGGSS, Bida annual athletic competition always respond and donates generously.

(d) The response to the question 'Data correct'? is yes. This "yes" is only the lower case.

(e) The program does not produce a long output and does not take long time in processing to produce the team position after any event.

(f) The program has a value limit and does not accept a negative number.

## 5.4 CONCLUSION

School sports started with the establishment of formal schools and aims at developing and promoting healthy sports competition that ensure adequate physical fitness for Nigeria youths.

Annual inter house sports competition in FGGSS, Bida also provide a means of involving all the student in athletics and from here select athletes to represent the school in outside engagements.

In Summary, this competition can be viewed as successful as it has positive social, religious and educational significance on the parents, guidance, relations, and well wishers of students and teachers of F.G.G.S.S.,Bida.

Socially, they offered opportunities to meet one another and learn to accommodate other people's views and behavior. Educationally, scholars and media houses have opportunity to write more about the school and their activities. Religiously, the competition afforded the opportunity to say opening and closing prayers in Christian and Muslim, to thank and honor God.

As the school sports record program cannot handle all the various athletic competition records problems, before it was designed, the problems were clearly defined in terms of:-

(1) The output, which is a formatted up-to-date league table will be displayed in the V.D.U. It is also printed after each event and sorted in descending order.

(2) In the process, three teams are awarded 5, 3 and 1 point respectively and these points are added to the appropriate team counter, after the team numbers have been identified.

(3) Input as the names and team numbers of the first three in event. This problem is further re-defined in term of flow chart, a number of different layout was made to produce a balanced diagram for the final version. This is accompanied by a good user documentation.

(4) All possible outcome of the program was tested and include test result with a sample run using dummy data.

The school sports record program is written in QBASIC (Micro-soft corporation 1981-1991), when compiled as an executable file, will operate on any IBM PC compatible computer.

## REFERENCES


Agala J. A. Physical Education, Book 1,2 & 3. Macmillan (Nig) LTD, 1990.

Bohl M. Flow charting Techniques. S.R.A., Publications 1978.

Bucher C. A. Foundation of physical Education (8th ed.) The C.V. Mosby Comp., St. Louis, 1979.

Gross J. L. Fundamental Programming Concepts. Harper and Row, 1981.

Ikeonu U. H. Introduction to physical Education For JSS. Onibonoje Press, 1989.

Kola R. Programming Made Easy - P.G.D. Lecture notes. Math/Computer Dept. F.U.T. Minna, 1996.

Porritt A.E. Athletics. A.A.A.,Jubilee Handbook 1930.

Reju R. A. Algorithm - P.G.D. Lecture Notes. Math/Computer Dept. F.U.T. Minna, 1996.

Zachman M. P.C. Tutor. P.C. Magazine 4(13) P. 243-245, 1985.

Appendix 1. School sports record program listing

```
10  REM  SCHOOL SPORT RECORD Program.NCRI_BIDA.(QBASICS)
20  CLEAR 100: DIM N(20): DIM C(20)
30  LPRINT : PRINT "          Run       ",
40  PRINT "       SCHOOL sports  records"
50  PRINT : LPRINT "     SCHOOL SPORTS RECORDS"
60  PRINT "      ....................."
70  PRINT : LPRINT "-------------------------",
80  REM Input section
90  INPUT "How many teams are competing-max 20"; T: PRINT
100  LPRINT "How many teams are competing-max 20 ?"; T:
     PRINT : PRINT ,
110  IF T < 21 THEN 130
120  PRINT "maximum of 20 teams please!": GOTO 90
130  INPUT "How many events are there"; E: PRINT : PRINT :
     PRINT
140  LPRINT "How many events are there ?";E: PRINT :
     PRINT: PRINT
150  FOR V = 1 TO E
160  PRINT "            Event no."; V: PRINT : PRINT
170  PRINT : LPRINT "   EVENT NO."; V: PRINT : PRINT ,
180  GOTO 210
190  PRINT "please input the result of event no. "; V; "
     again": PRINT : PRINT
200  PRINT : LPRINT "PLEASE INPUT THE RESULT OF EVENT NO.
     "; V; " AGAIN"
210  FOR N = 1 TO 3
220  PRINT : PRINT "Name & team number of "; N; " to
     finish"
```

```
230  PRINT : LPRINT "NAMES & TEAM NUMBER OF "; N; " TO
     FINISH",
240  INPUT N$, P
250  PRINT : LPRINT N$, P,
260  IF P <= T THEN 290
270  PRINT : LPRINT "You said there were only"; T; "teams
     competing!":
280  GOTO 220
290  LET A$(N) = N$: LET A(N) = P
300  NEXT N
310  PRINT : PRINT : PRINT : PRINT
320  REM GRAPH : TEXT
330  REM  data verification section
340  PRINT : PRINT "please check the data you have just
     entered. if it is";
350  PRINT : LPRINT "PLEASE CHECK THE DATA YOU JUST
     ENTERED. IF IT IS";
360  PRINT : PRINT "correct, type yes after the prompt":
     PRINT : PRINT
370  PRINT : LPRINT "CORRECT, TYPE  yes AFTER THE PROMPT":
     PRINT
380  PRINT : PRINT "Name", "Team no.": PRINT
390  PRINT : LPRINT "NAME", "TEAM NO.": PRINT ,
400  FOR N = 1 TO 3
410  PRINT : PRINT A$(N), A(N)
420  PRINT : LPRINT A$(N), A(N)
430  NEXT N: PRINT : PRINT
440  INPUT "data correct "; R$: IF R$ <> "yes" THEN 190
450  PRINT : LPRINT "Data Correct ?"; R$
```

```
470  FOR Z = 1 TO T: FOR N = 1 TO 3
480  IF A(N) = Z AND N = 1 THEN 550
490  IF A(N) = Z AND N = 2 THEN 560
500  IF A(N) = Z AND N = 3 THEN 570
510  NEXT N
520  NEXT Z
530  PRINT : PRINT : PRINT : GOTO 580
540  REM  score totalling section
550  B(Z) = B(Z) + 5: GOTO 520
560  B(Z) = B(Z) + 3: GOTO 520
570  B(Z) = B(Z) + 1: GOTO 520
580  FOR R = 1 TO T: C(R) = B(R): NEXT R
590  FOR Q = 1 TO T
600  C(Q) = C(Q) + Q / 100
610  NEXT Q
620  IF V <> E THEN 660 ELSE PRINT : PRINT "   Final team
     positions":
630  LPRINT "    FINAL TEAM POSITION": PRINT
640  PRINT : PRINT "   .................": PRINT : PRINT :
     GOTO 710
650  PRINT : LPRINT "  -------------------------": PRINT ,
660  IF V <> 1 THEN 680 ELSE PRINT : PRINT "    Team
     position after"; V; "event":
670  LPRINT "    TEAM POSITION AFTER"; V; "EVENTS": PRINT
680  PRINT : PRINT : GOTO 710
690  PRINT : PRINT "    Team position after "; V; "Events":
PRINT : PRINT
700  PRINT : LPRINT "    TEAM POSITION AFTER"; V; "EVENTS":
PRINT : PRINT ,
```

```
710  PRINT : PRINT "Team no.", "Total points"
720  PRINT : LPRINT "TEAM NO.", "TOTAL POINTS"
7 3 0          P R I N T     :     P R I N T
".........................................."
7 4 0          P R I N T     :     L P R I N T
"------------------------------------------"
760  FOR N = 1 TO T - 1: FOR K = N + 1 TO T
770  IF C(N) >= C(K) THEN 790
780  W = C(N): C(N) = C(K): C(K) = W
790  NEXT K
800  NEXT N
810  FOR J = 1 TO T
820  S = INT((C(J) - INT(C(J))) * 100 + .1)
830  PRINT : PRINT S, INT(C(J))
840  PRINT : LPRINT S, INT(C(J))
850  NEXT J
860  PRINT : PRINT : PRINT : PRINT : NEXT V
870  END
```

Appendix 2. Hand Annotated Program Segment

```
340  ?"Please Check the data you                    ──┐
     have just entered, if it is";                    | Event
360  ?"correct, type yes after the prompt":?:?        | Data
380  ?"Name","team No.":?                             | Check
400  For N = 1 to 3                                   |
410  ? A$(N), A(N)                                    |
430  Next N: ?: ?                                   ──┘
440  Input "Data correct";R$: If R$<>"yes" then 190
460  Rem  AWARDING POINTS SECTION
470  For Z = 1 to T: For N = 1 to 3 ──┐
480  If A(N) = Z and N=1 Then 550     | Deciding which
490  If A(N) = Z and N=2 Then 560     | Team has come
500  If A(N) = Z and N=3 Then 570     | 1st,2nd and 3rd
510  Next N                           | in the event
520  Next Z                         ──┘
530  ?: ?: ?: Go to 580
540  Rem Score Totalling Section
550  B(Z) = B(Z) + 5  Goto 520   ──┐ Awarding
560  B(Z) = B(Z) + 3  Goto 520     | points to the
570  B(Z) = B(Z) + 1  Goto 520   ──┘ winning teams
580  For R = 1 to T: C(R)=B(R): next R     Coping to
590  For Q = 1 to T    ──┐ Adding "Tail"
600  C(Q) = C(Q) + Q/100  | derived from
610  Next Q            ──┘ team number
```

Appendix 3. Table of variables used in school sports record program.

| Variable No. | Purpose | Where Used | Line |
|---|---|---|---|
| T | Hold number of teams. | Input & control of counter | 90 |
| E | Hold number of events. | Input & control of counter | 130 |
| V | Main event counter. | Main program control | 150 |
| N$ | Name of competitor. | Input | 240 |
| P | Team Number. | Input | 240 |
| A$ | Array to hold names. | Input | 290 |
| N | Counter to control 1st 3 to finish. | Input<br>Validity | 210<br>400 |
| | To identify 1st, 2nd and 3rd in each event. | Process | 470 |
| A | Array to hold team number of first three. | Input<br>Validity<br>Process | 290<br>410<br>480-500 |
| B | Array to hold scores of all teams. | Process | 550-570 |
| R$ | Hold answers to question. | Validity | 440 |
| Z | Used as counter and to identify team number. | Process | 470 |
| R | Counter to control copying of data from A to B. | Process | 580 |
| C | Array to hold scores plus team identifier. | Process | 580, 600<br>770 |

Appendix 3 (continued)

| | | | |
|---|---|---|---|
| K | Counter to control sort routine. | Process | 760 |
| W | Spare location used during sorting. | Process | 780 |
| S | Team identifier. | Output | 820 |